Fitting Instructions - Read instructions carefully before fitting and follow them for correct use

IN8039 ULTI Bars - X3

2

VAN GUARD

FX4012 X6 (M6X16)	FX4016 X12 (M6)	FX4017 X6 (M6)	FX4042 X12 (M6)	MA6017 X6	MA6065 X6	ME0203 X6	ME0687 X2
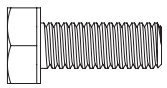	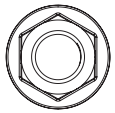	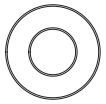	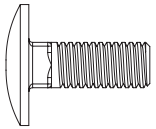	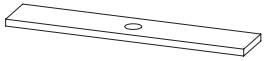	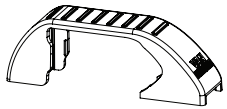	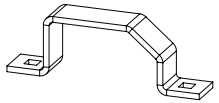	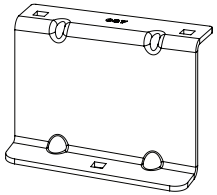

ME0688 X2	ME0689 X2
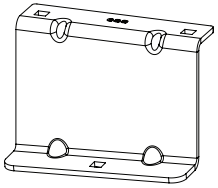	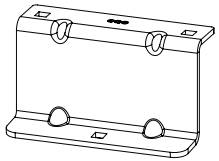

TOOLS REQUIRED

10MM X 1

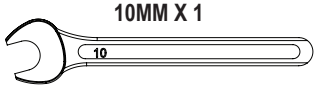

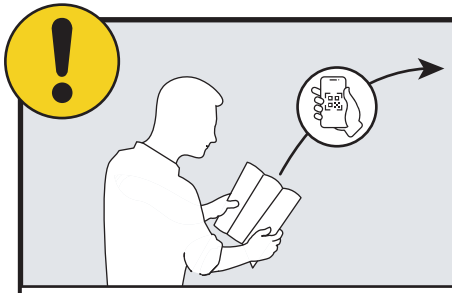

EN - SAFETY AND PRODUCT INFORMATION
DE - SICHERHEITS- UND PRODUKTINFORMATIONEN
FR - INFORMATIONS DE SÉCURITÉ ET DU PRODUIT
NL - VEILIGHEIDS- EN PRODUCTINFORMATIE
ES - INFORMACIÓN DE SEGURIDAD Y DEL PRODUCTO
IT - INFORMAZIONI SULLA SICUREZZA E SUL PRODOTTO
SV - SÄKERHETS- OCH PRODUKTINFORMATION
DA - SIKKERHEDS- OG PRODUKTINFORMATION
NO - SIKKERHETS- OG PRODUKTINFORMASJON
PL - INFORMACJE O BEZPIECZEŃSTWIE I PRODUKCIE
CS - INFORMACE O BEZPEČNOSTI A PRODUKTU

Customercare@van-guard.co.uk
UK +44 (0) 1392 368 351

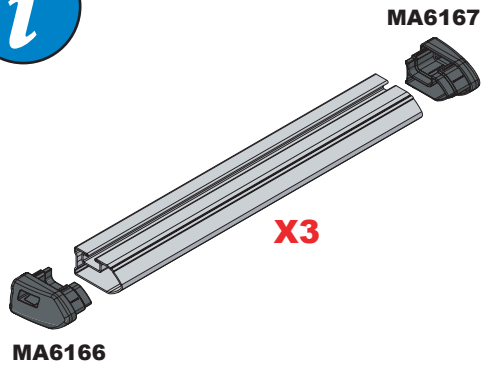

ULTI Bar Trade
(Steel)

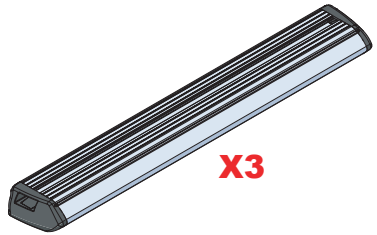

ULTI Bar+
(Aluminium)

This FITTING INSTRUCTION is the property of VAN GUARD ACCESSORIES LTD. and must not be used for manufacturing purposes, copied nor communicated in any way to third parties without written permission from VAN GUARD ACCESSORIES LTD.

IN8039_E (CN:00183)

Van Guard Accessories Ltd
Fair Oak Close, Exeter Airport Business Park,
Exeter, Devon, EX5 2UL
www.van-guard.co.uk

VG173

Vehicle:
Fiat Doblo: 2000 - 2010
Wheel Base: Standard (L1)
Roof Height: Standard (H1)
Rear Doors: Twin / Tailgate

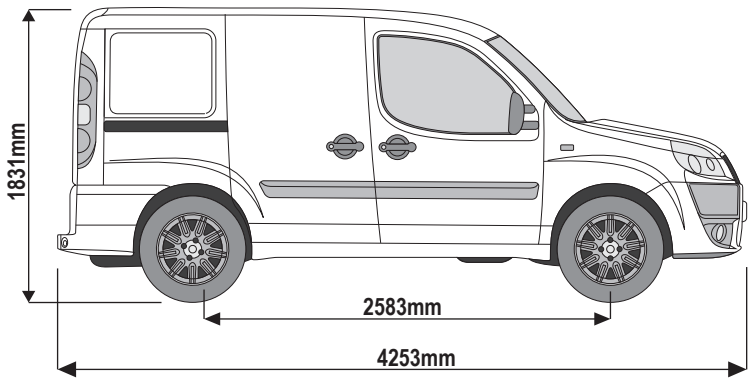

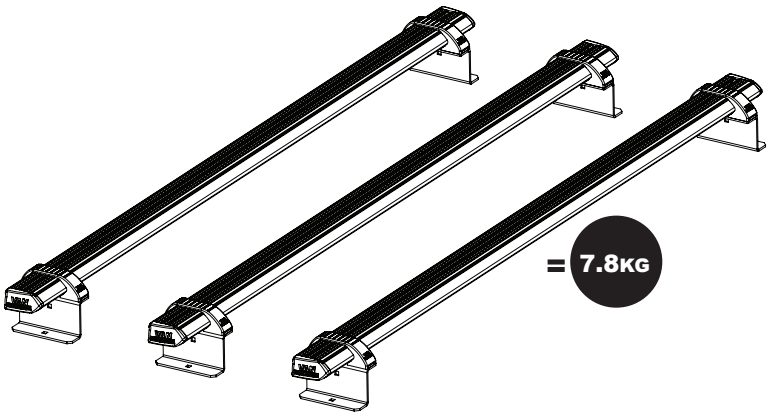

1

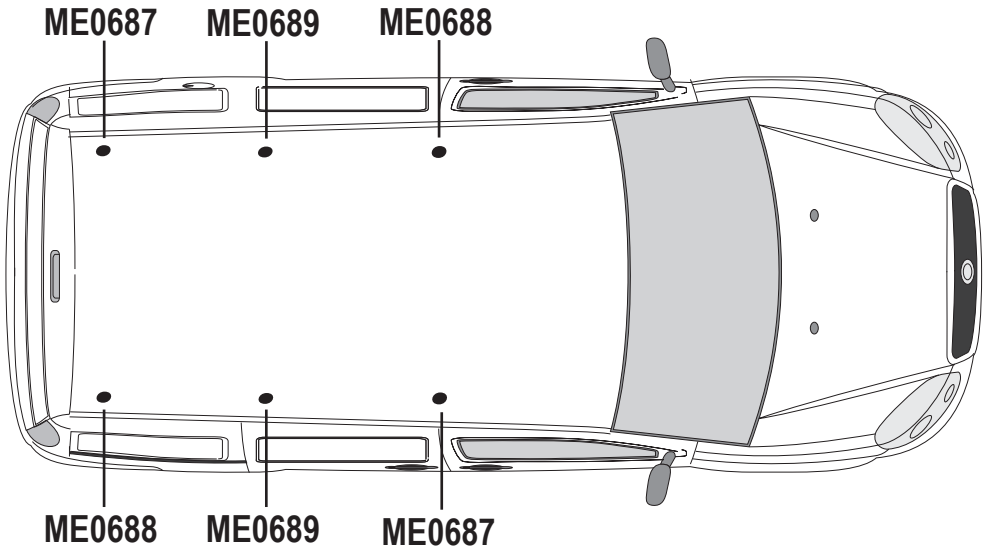

ME0687

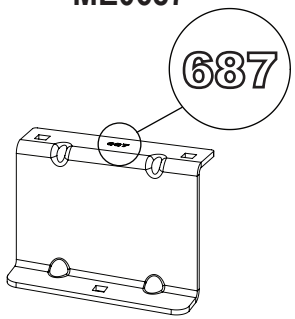

ME0688

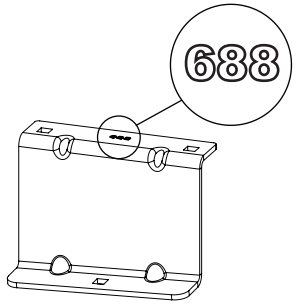

ME0689

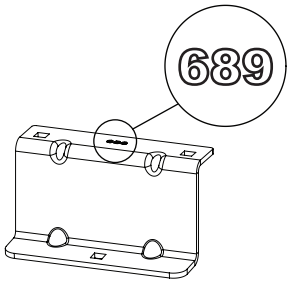

2

Stick rubber pads to all roof brackets.

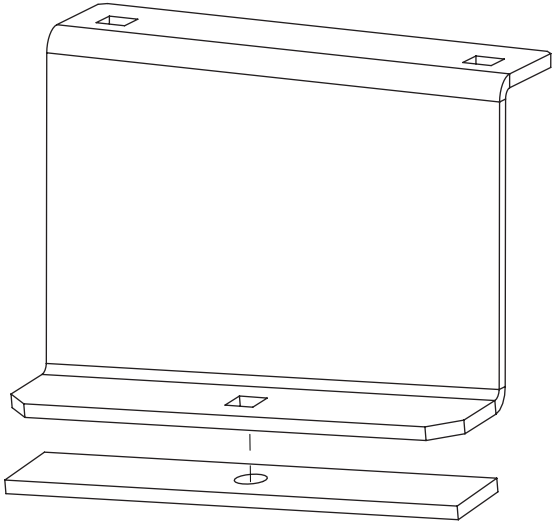

3

Remove the roof plugs to reveal the vehicles fixing points.

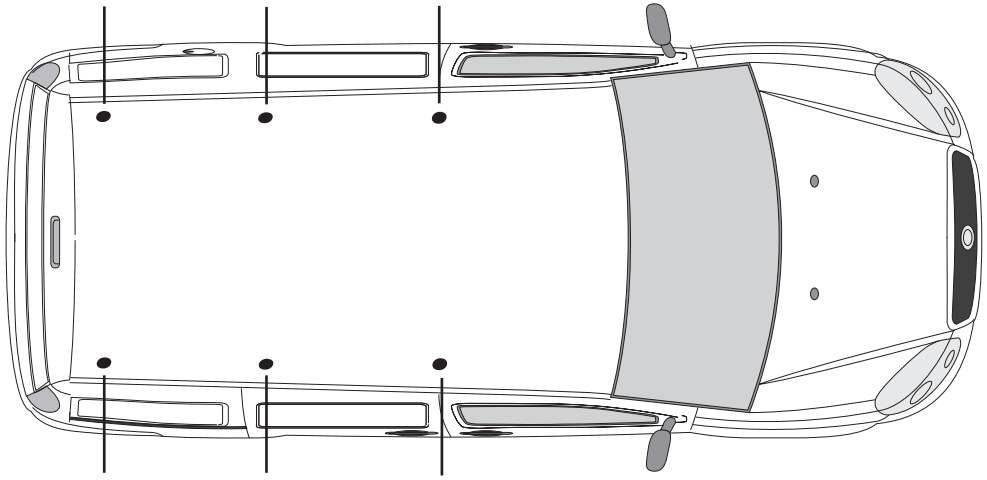

4 Place the roof brackets onto the roof and bolt down through the fixing points using M6X16 hex bolts & M6 washers.

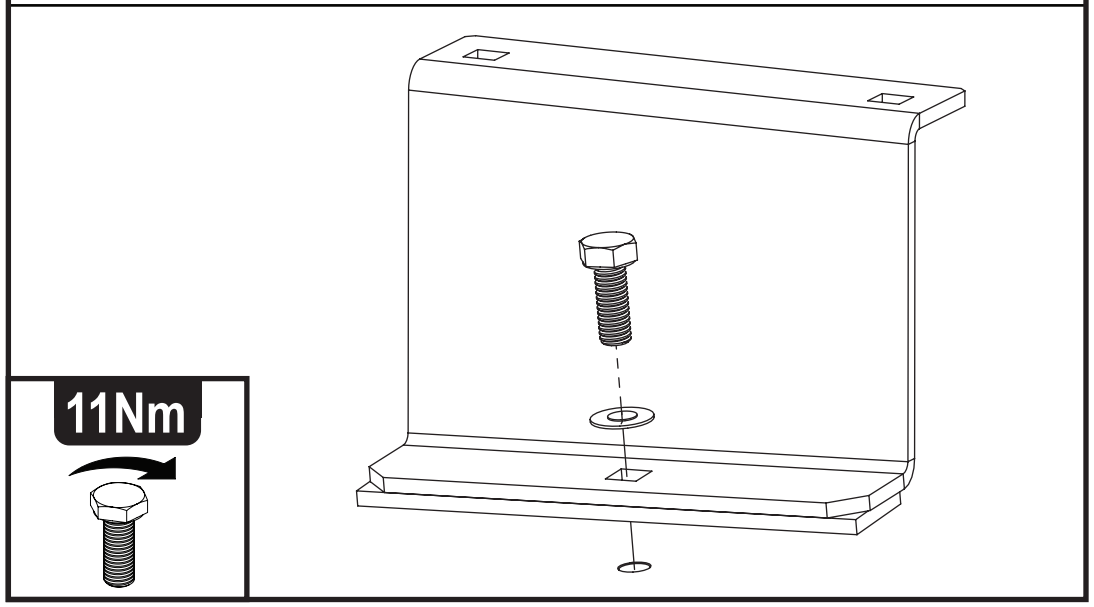

5 Place the roof bars onto the roof brackets and loosely secure using M6X16 coach bolts & M6 flange nuts.

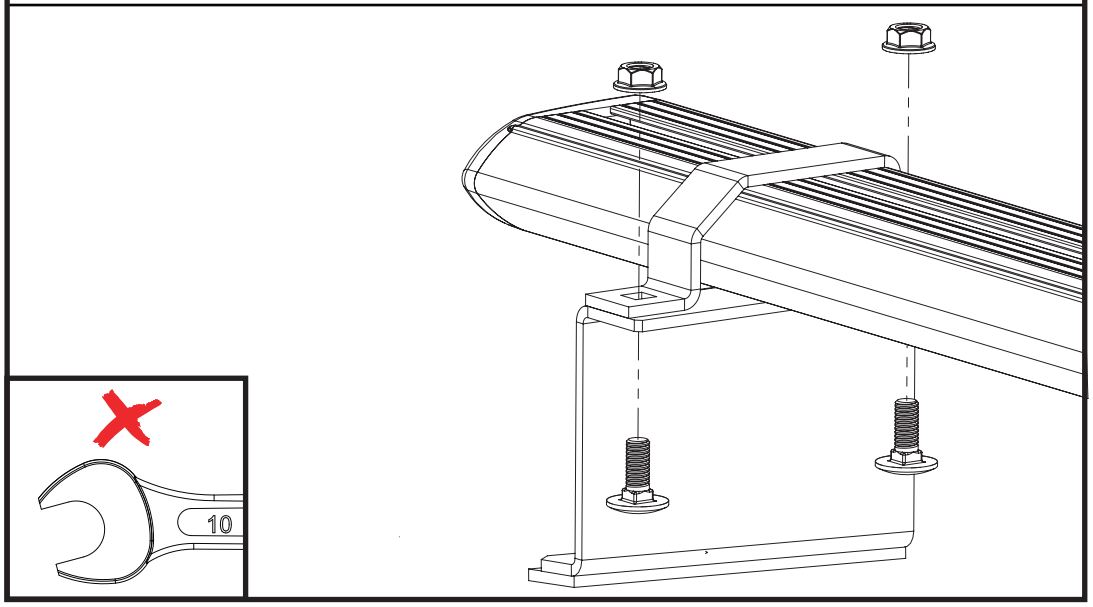

6 Adjust the roof bars to ensure that they are evenly spaced on the vehicle.

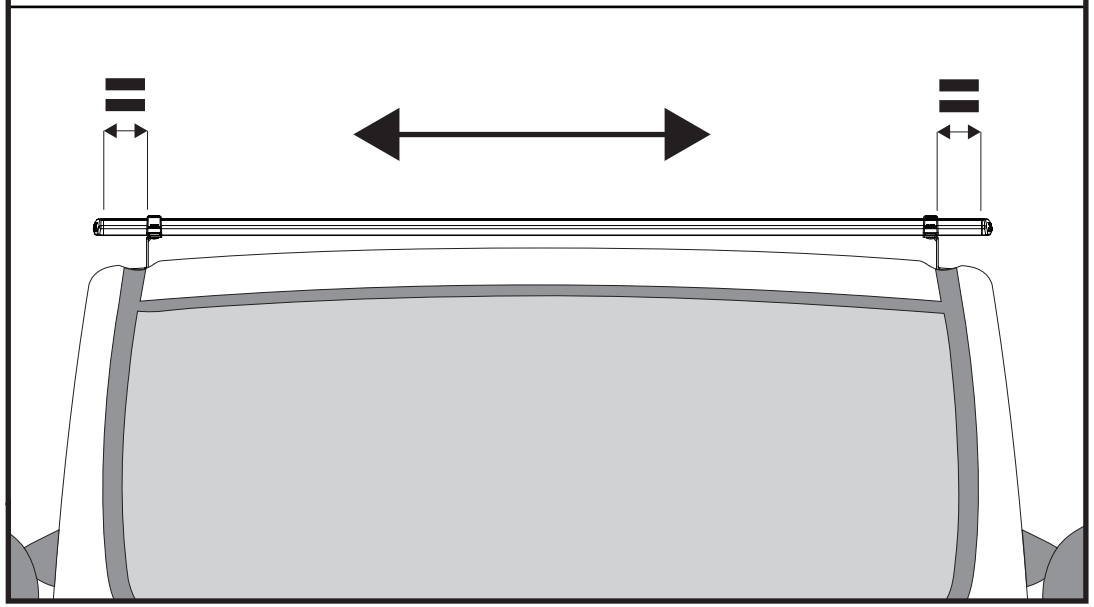

7 Tighten the roof bar fixings to 11Nm.

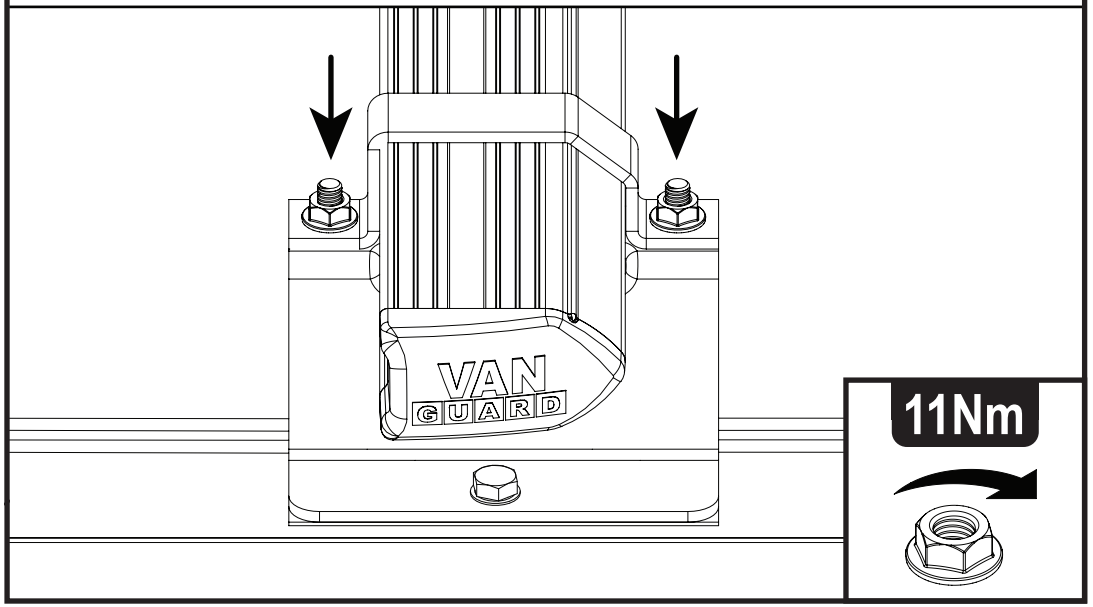

8

1.

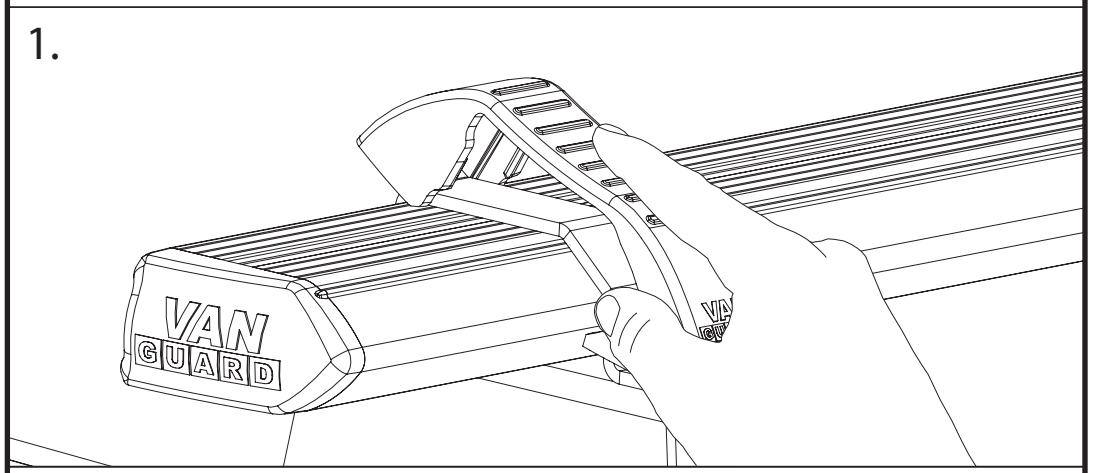

2.

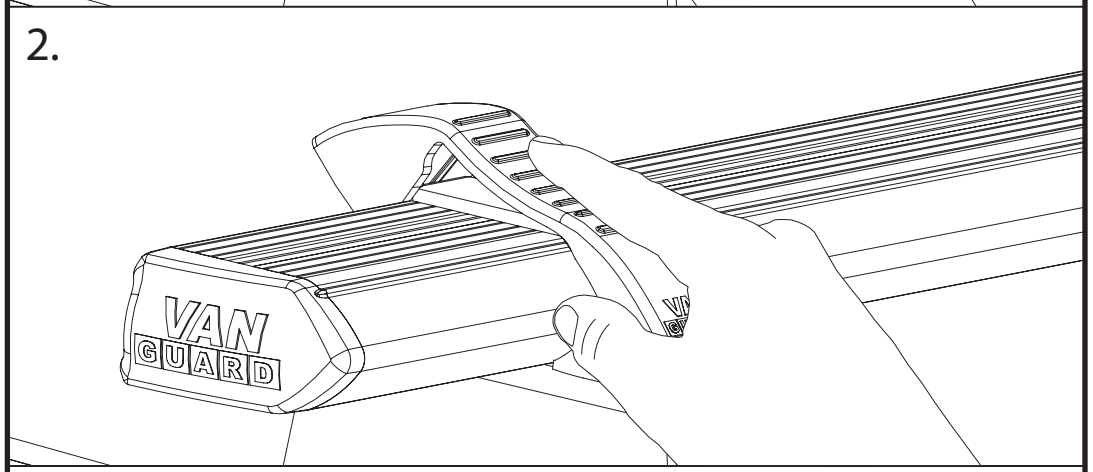

3.

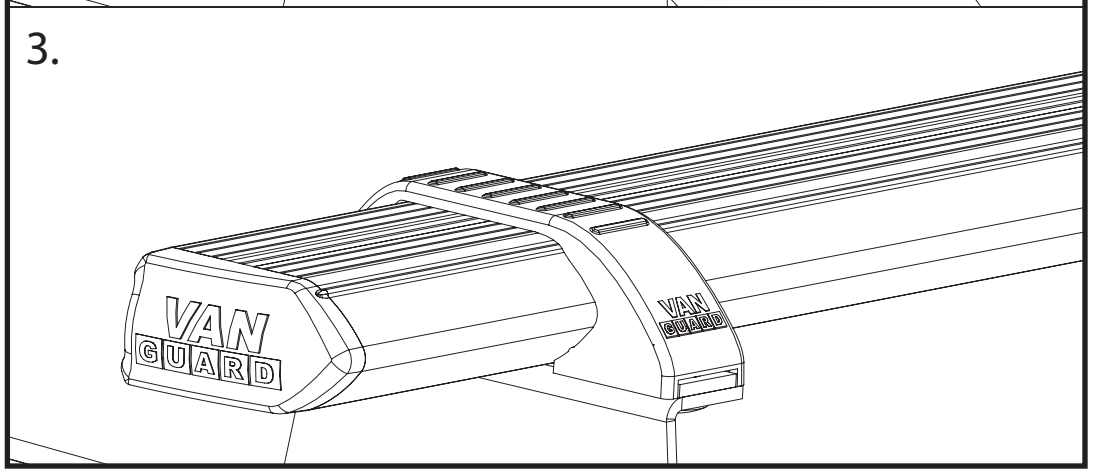

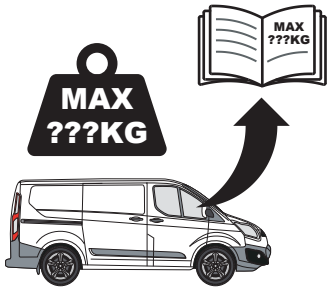

ULTI Bar Trade (Steel)	ULTI Bar+ (Aluminium)
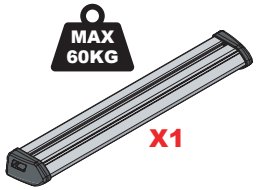	

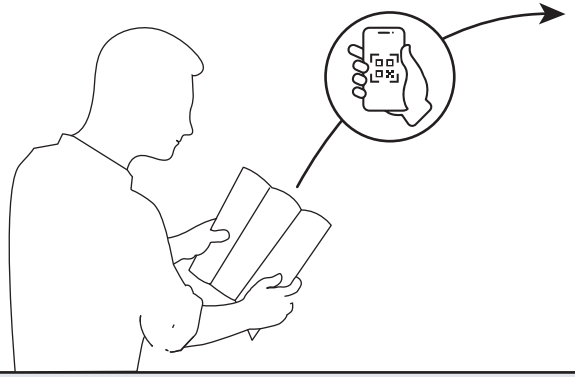

EN - SAFETY AND PRODUCT INFORMATION
DE - SICHERHEITS- UND PRODUKTINFORMATIONEN
FR - INFORMATIONS DE SÉCURITÉ ET DU PRODUIT
NL - VEILIGHEIDS- EN PRODUCTINFORMATIE
ES - INFORMACIÓN DE SEGURIDAD Y DEL PRODUCTO
IT - INFORMAZIONI SULLA SICUREZZA E SUL PRODOTTO
SV - SÄKERHETS- OCH PRODUKTINFORMATION
DA - SIKKERHEDS- OG PRODUKTINFORMATION
NO - SIKKERHETS- OG PRODUKTINFORMASJON
PL - INFORMACJE O BEZPIECZEŃSTWIE I PRODUKCIE
CS - INFORMACE O BEZPEČNOSTI A PRODUKTU