Fitting Instructions - Read instructions carefully before fitting and follow them for correct use

IN8330 ULTI Bars - X2

2

VAN GUARD

FX4014 X4 (RUBBER)	FX4016 X8 (M6)	FX4019 X4 (M8)	FX4028 X4 (M8X25)	FX4040 X4 (M8)	FX4042 X8 (M6X16)	MA6065 X4	MA6018 X4
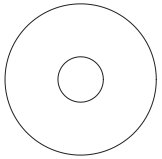	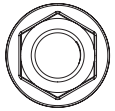	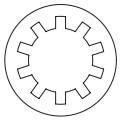	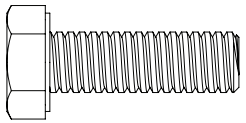	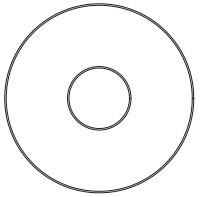	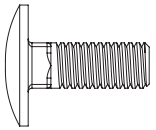	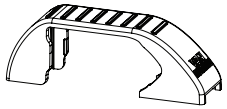	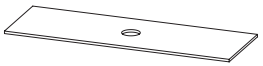

ME0203 X4	ME1678 X1	ME1679 X1	ME1681 X1	ME1682 X1
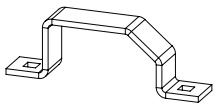	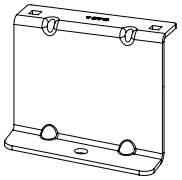	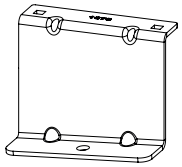	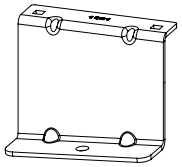	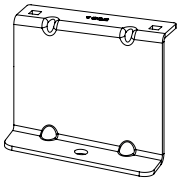

TOOLS REQUIRED

10MM X 1

13MM X 1

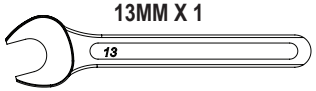

TAPE MEASURE X 1

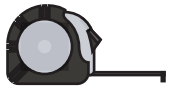

5MM HEX / ALLEN KEY X 1

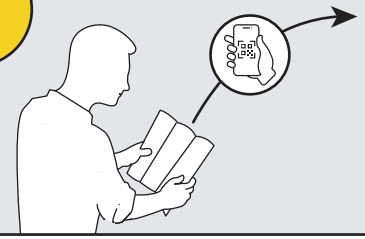

EN - SAFETY AND PRODUCT INFORMATION
DE - SICHERHEITS- UND PRODUKTINFORMATIONEN
FR - INFORMATIONS DE SÉCURITÉ ET DU PRODUIT
NL - VEILIGHEIDS- EN PRODUCTINFORMATIE
ES - INFORMACIÓN DE SEGURIDAD Y DEL PRODUCTO
IT - INFORMAZIONI SULLA SICUREZZA E SUL PRODOTTO
SV - SÄKERHETS- OCH PRODUKTINFORMATION
DA - SIKKERHEDS- OG PRODUKTINFORMATION
NO - SIKKERHETS- OG PRODUKTINFORMASJON
PL - INFORMACJE O BEZPIECZEŃSTWIE I PRODUKCIE
CS - INFORMACE O BEZPEČNOSTI A PRODUKTU

Customercare@van-guard.co.uk
UK +44 (0) 1392 368 351

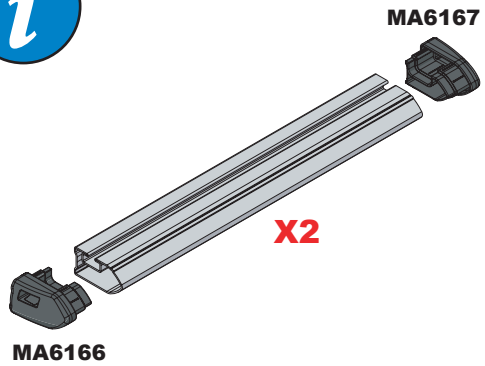

ULTI Bar Trade
(Steel)

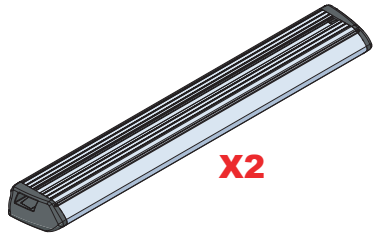

ULTI Bar+
(Aluminium)

This FITTING INSTRUCTION is the property of VAN GUARD ACCESSORIES LTD. and must not be used for manufacturing purposes, copied nor communicated in any way to third parties without written permission from VAN GUARD ACCESSORIES LTD.

IN8330_D (CN:00183)

Van Guard Accessories Ltd
Fair Oak Close, Exeter Airport Business Park,
Exeter, Devon, EX5 2UL
www.van-guard.co.uk

341-2

Vehicle:
Volkswagen Caddy 5 2021 on
Wheel Base: SWB (L1)
Roof Height: H1
Rear Doors: Twin / Tailgate

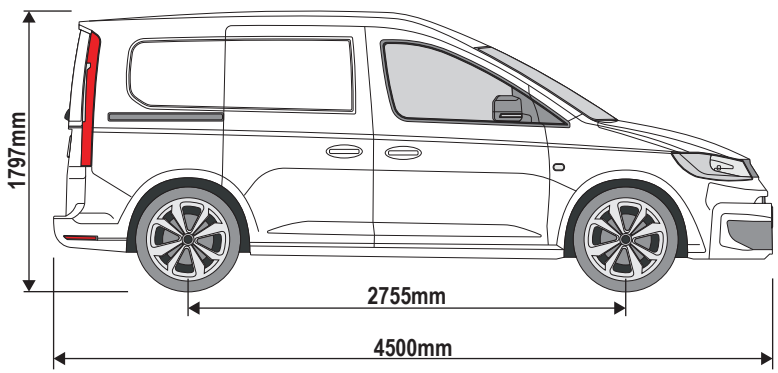

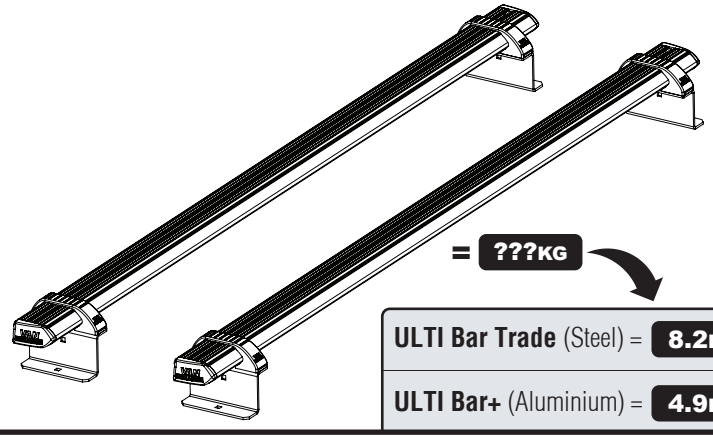

= ???KG

ULTI Bar Trade (Steel) =	**8.2KG**
ULTI Bar+ (Aluminium) =	**4.9KG**

341-2

Vehicle:
Volkswagen Caddy 5 2021 on
Wheel Base: MAXI (L2)
Roof Height: H1
Rear Doors: Twin / Tailgate

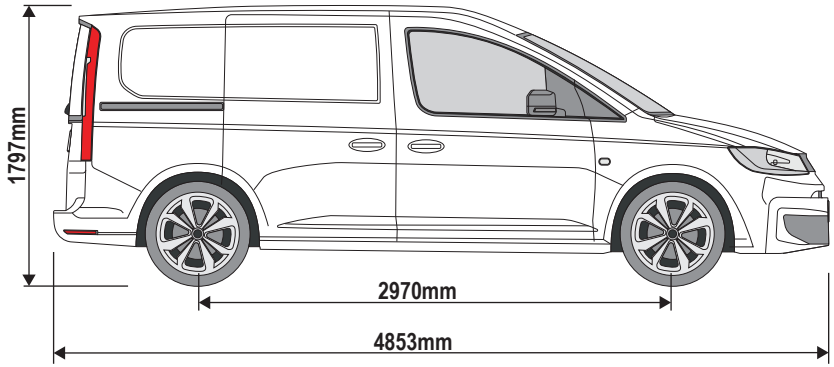

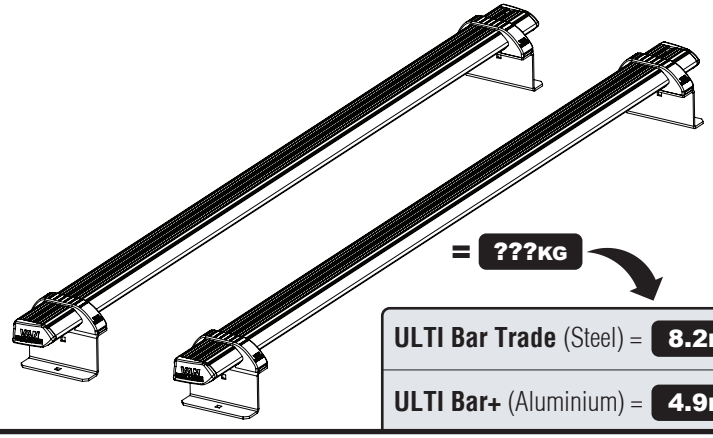

= ???KG

ULTI Bar Trade (Steel) =	**8.2KG**
ULTI Bar+ (Aluminium) =	**4.9KG**

1

1678

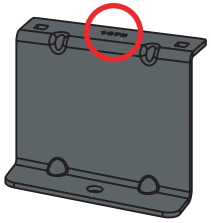

1679

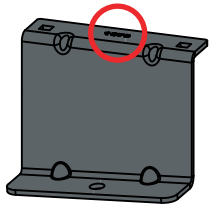

1681

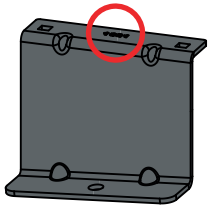

1682

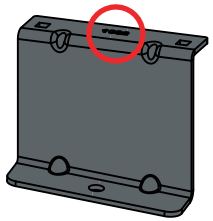

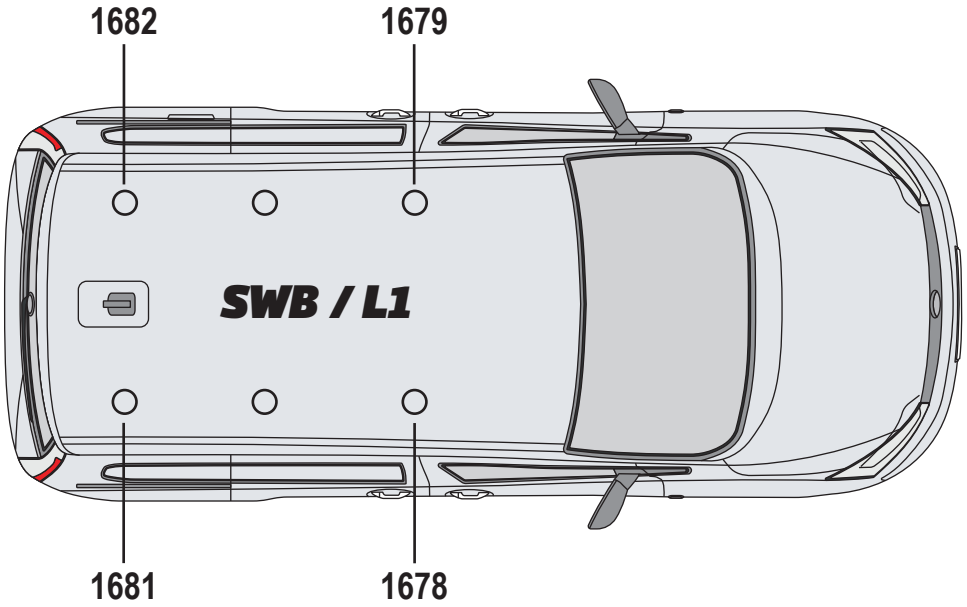

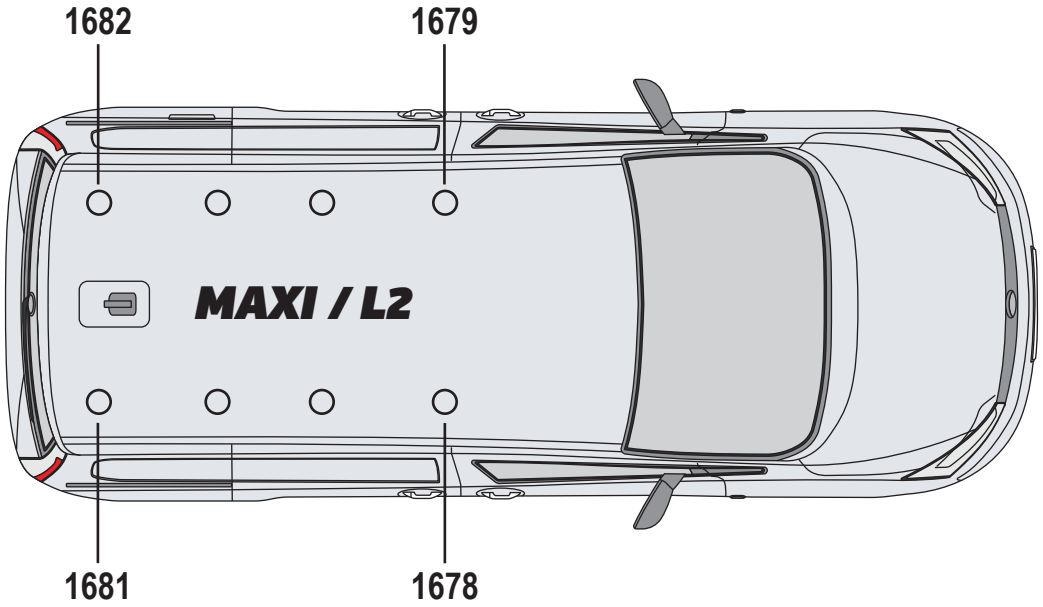

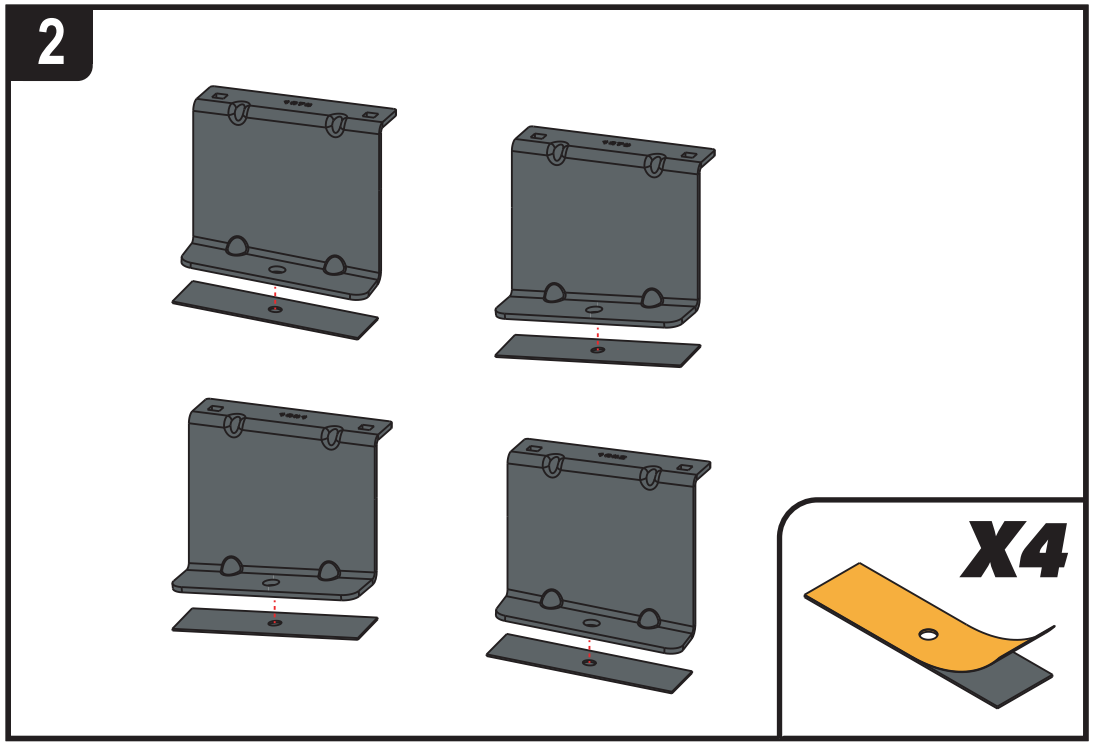
2
X4

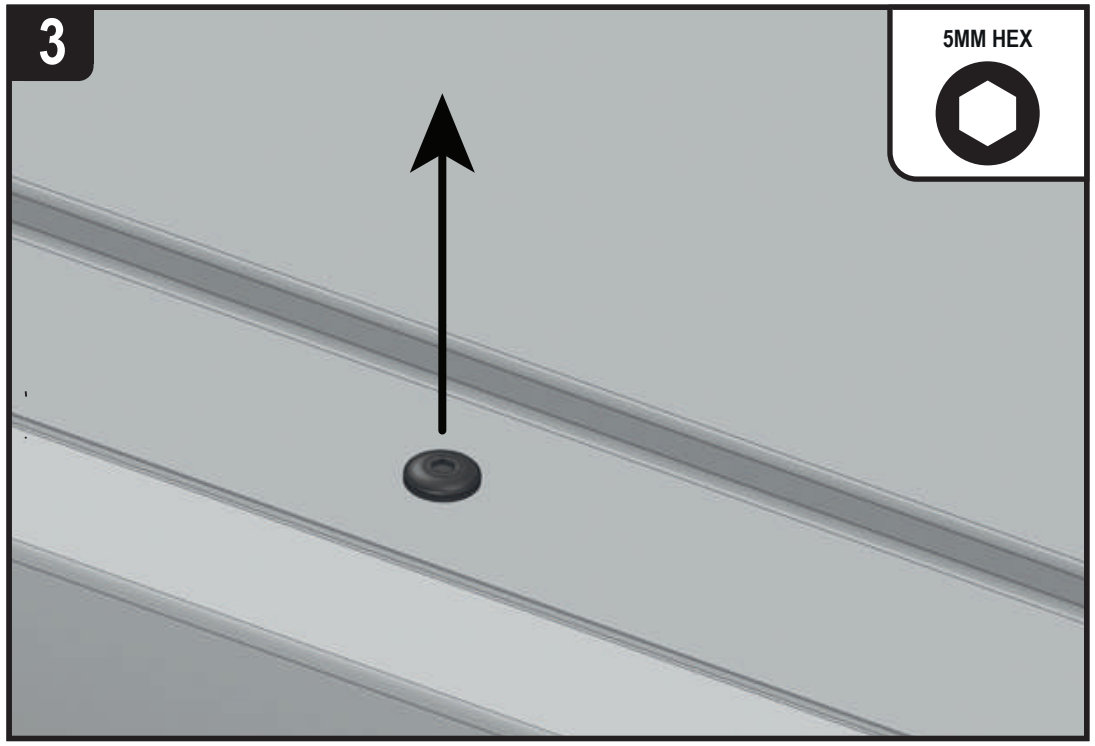
3
5MM HEX

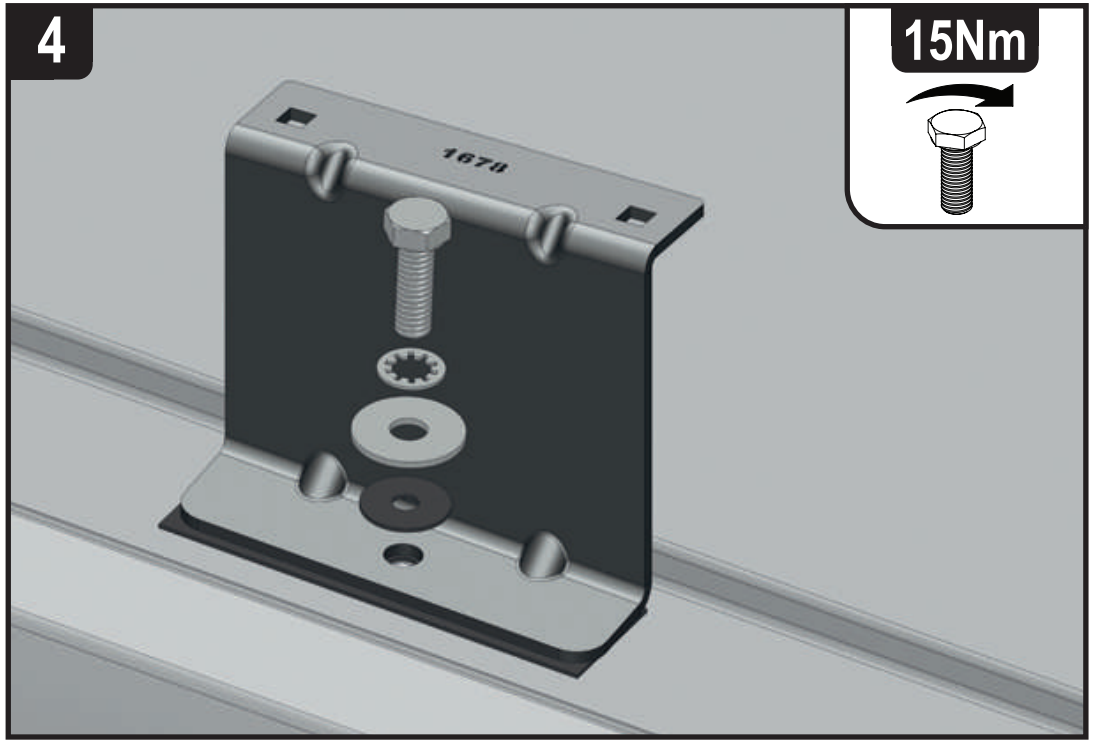
4
15Nm
1678

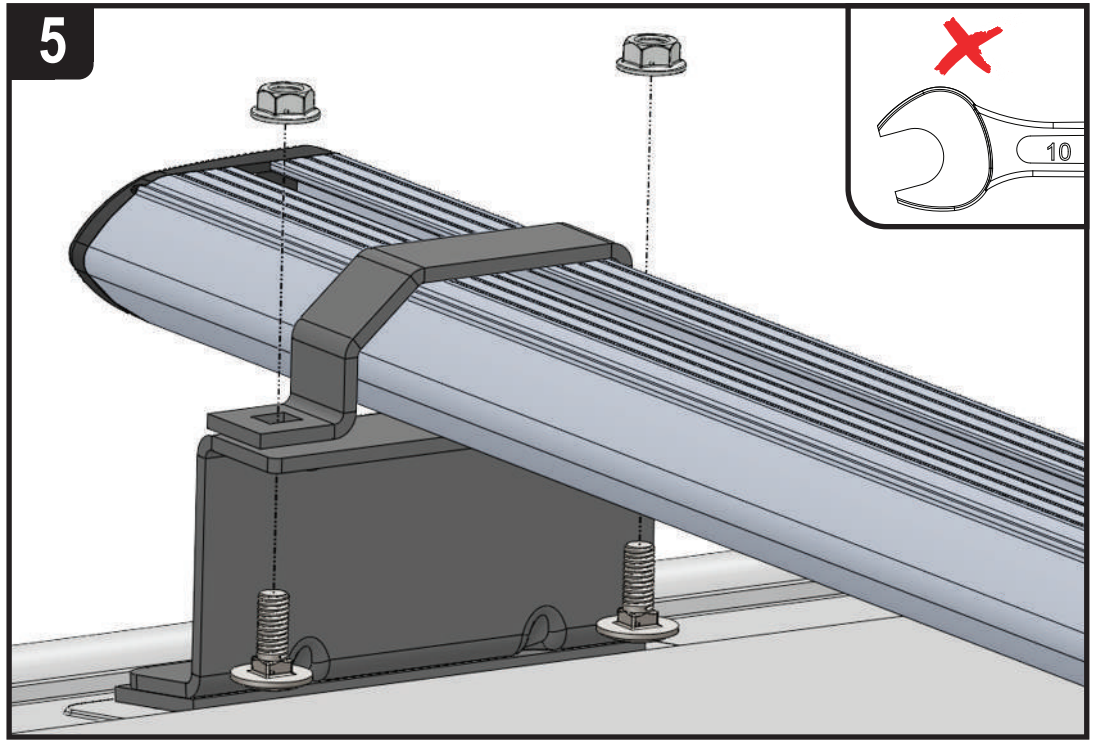
5
10

6

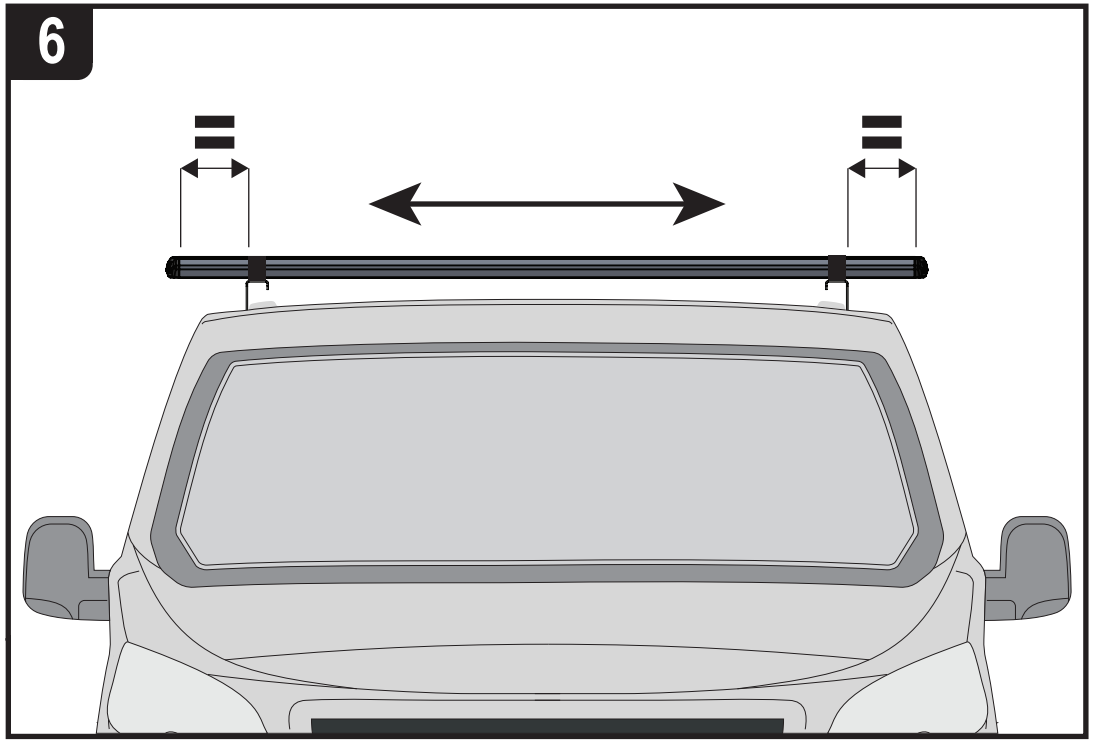

7

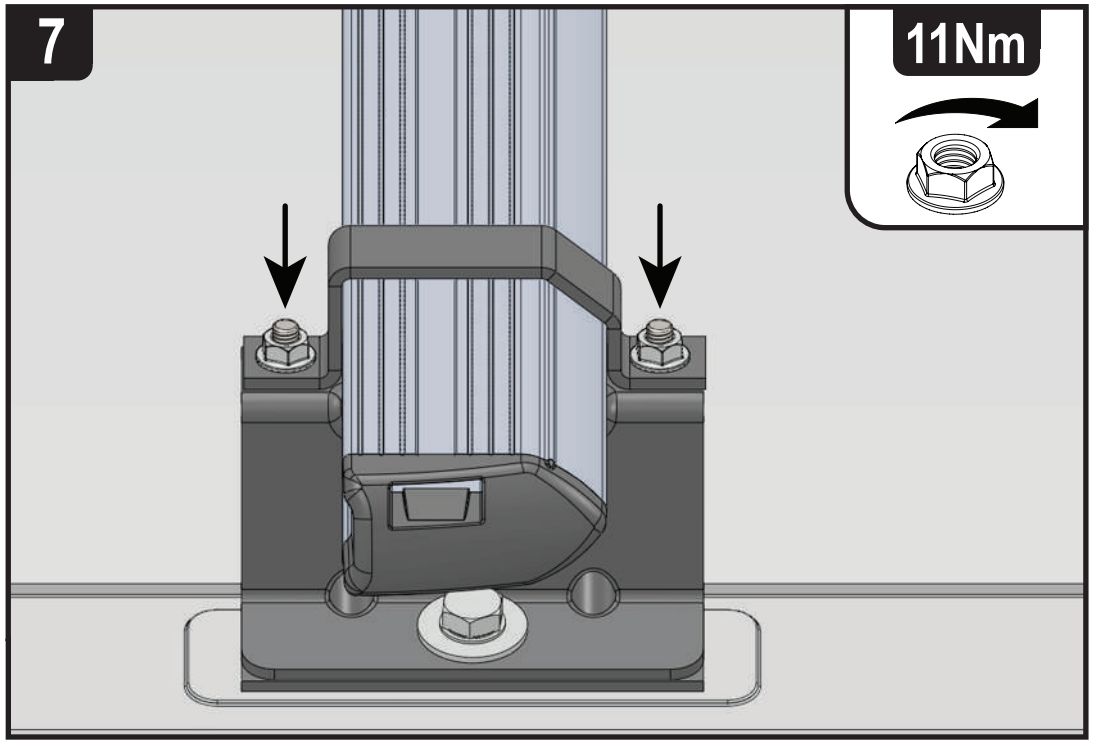

8

1.

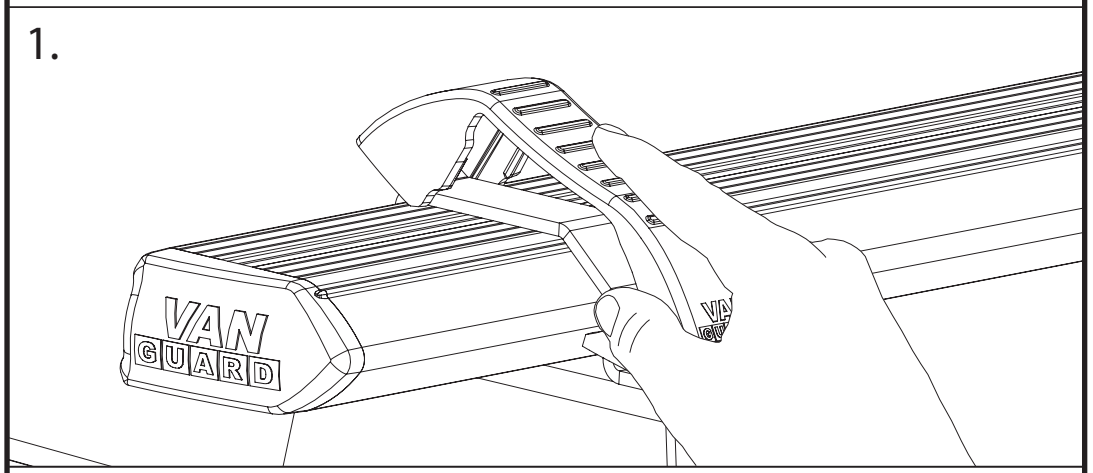

2.

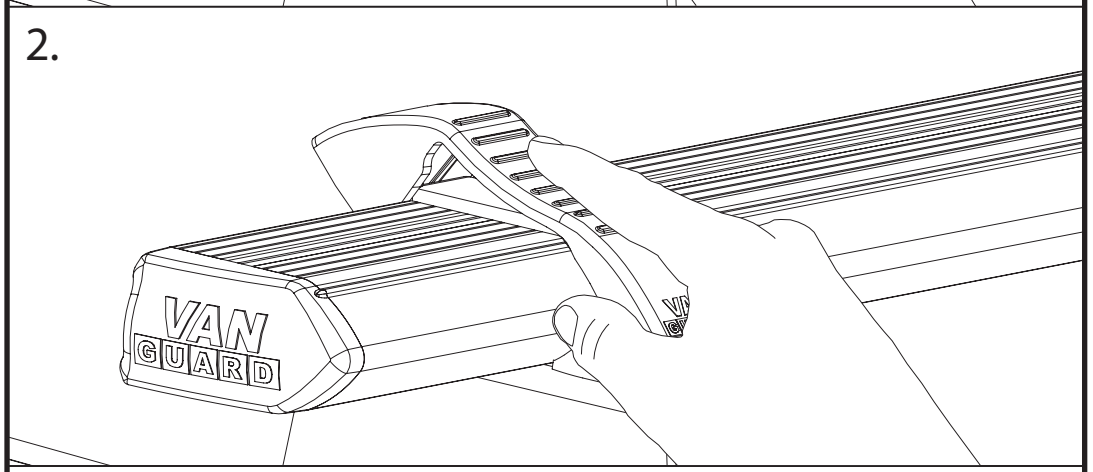

3.

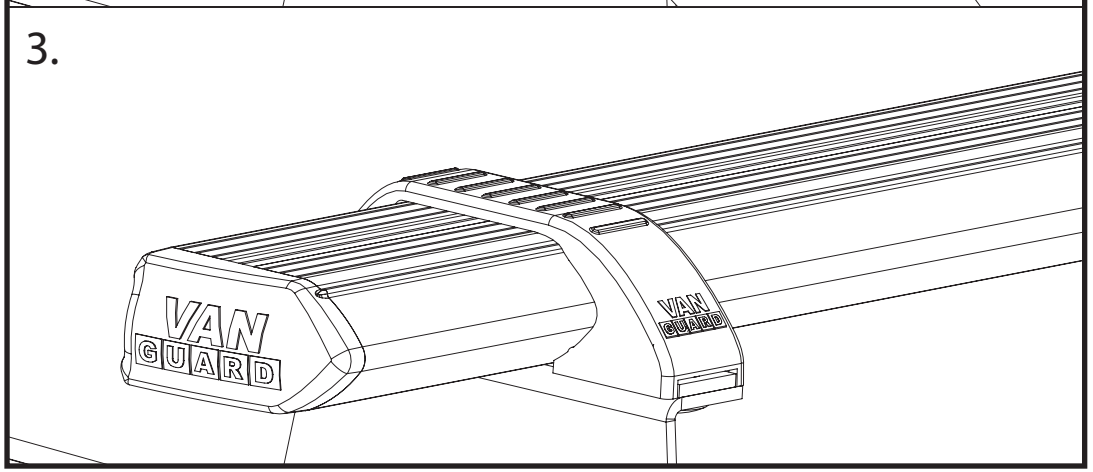

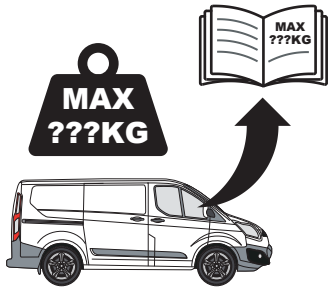

ULTI Bar Trade (Steel)	ULTI Bar+ (Aluminium)
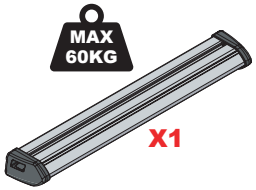	

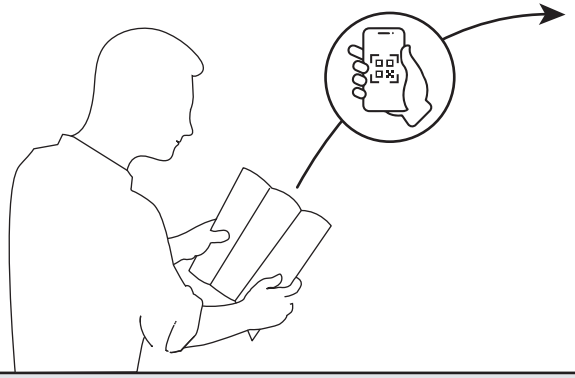

EN - SAFETY AND PRODUCT INFORMATION
DE - SICHERHEITS- UND PRODUKTINFORMATIONEN
FR - INFORMATIONS DE SÉCURITÉ ET DU PRODUIT
NL - VEILIGHEIDS- EN PRODUCTINFORMATIE
ES - INFORMACIÓN DE SEGURIDAD Y DEL PRODUCTO
IT - INFORMAZIONI SULLA SICUREZZA E SUL PRODOTTO
SV - SÄKERHETS- OCH PRODUKTINFORMATION
DA - SIKKERHEDS- OG PRODUKTINFORMATION
NO - SIKKERHETS- OG PRODUKTINFORMASJON
PL - INFORMACJE O BEZPIECZEŃSTWIE I PRODUKCIE
CS - INFORMACE O BEZPEČNOSTI A PRODUKTU